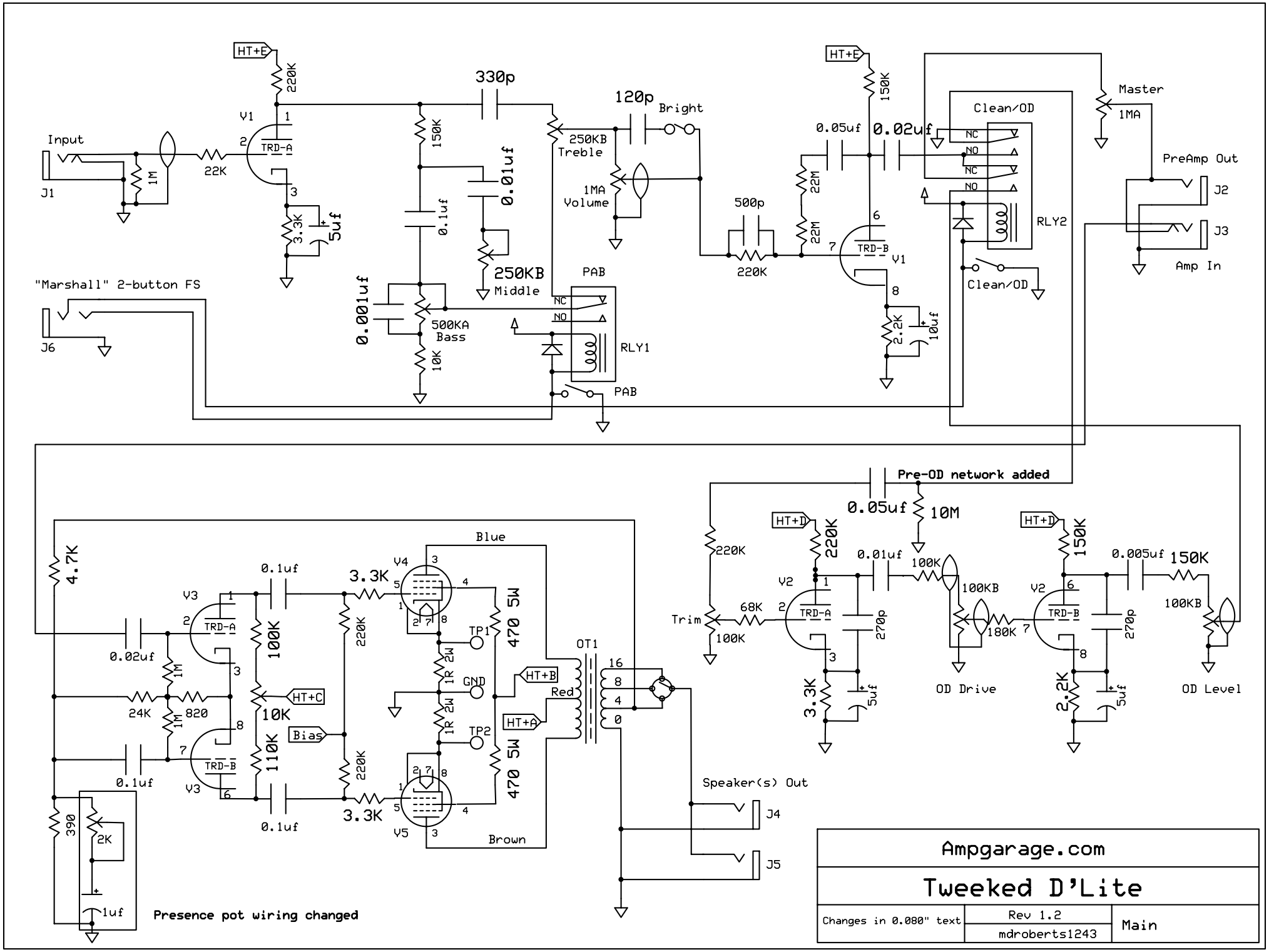
HT+E
220K
Y1
TRD-A
Input
J1
1M
22K
3.3K
5uf
330p
150K
0.01uf
0.1uf
250KB
Middle
250KB
Treble
120p
Bright
1MA
Volume
"Marshall" 2-button FS
J6
0.001uf
500KA
Bass
10K
PAB
NC
NO
RLY1
PAB
500p
220K
22M
22M
150K
0.05uf
0.02uf
TRD-B
Y1
2.2K
10uf
Clean/OD
RLY2
Clean/OD
Master
1MA
PreAmp Out
J2
J3
Amp In
Pre-OD network added
0.05uf
10M
220K
HT+D
220K
0.01uf
100K
100KB
Y2
TRD-A
68K
Trim
100K
270p
3.3K
5uf
OD Drive
180K
HT+D
150K
0.005uf
150K
Y2
TRD-B
270p
2.2K
5uf
100KB
OD Level
4.7K
0.02uf
Y3
TRD-A
1M
24K
1M
820
0.1uf
TRD-B
Y3
390
2K
1uf
0.1uf
100K
10K
HT+C
110K
Bias
0.1uf
3.3K
220K
220K
3.3K
Y4
Y5
Blue
Brown
TP1
TP2
GND
1R 2W
1R 2W
470 5W
470 5W
HT+B
Red
HT+A
OT1
16
8
4
0
Speaker(s) Out
J4
J5
Presence pot wiring changed
Ampgarage.com
Tweeked D'Lite
Changes in 0.080" text
Rev 1.2
mdroberts1243
Main