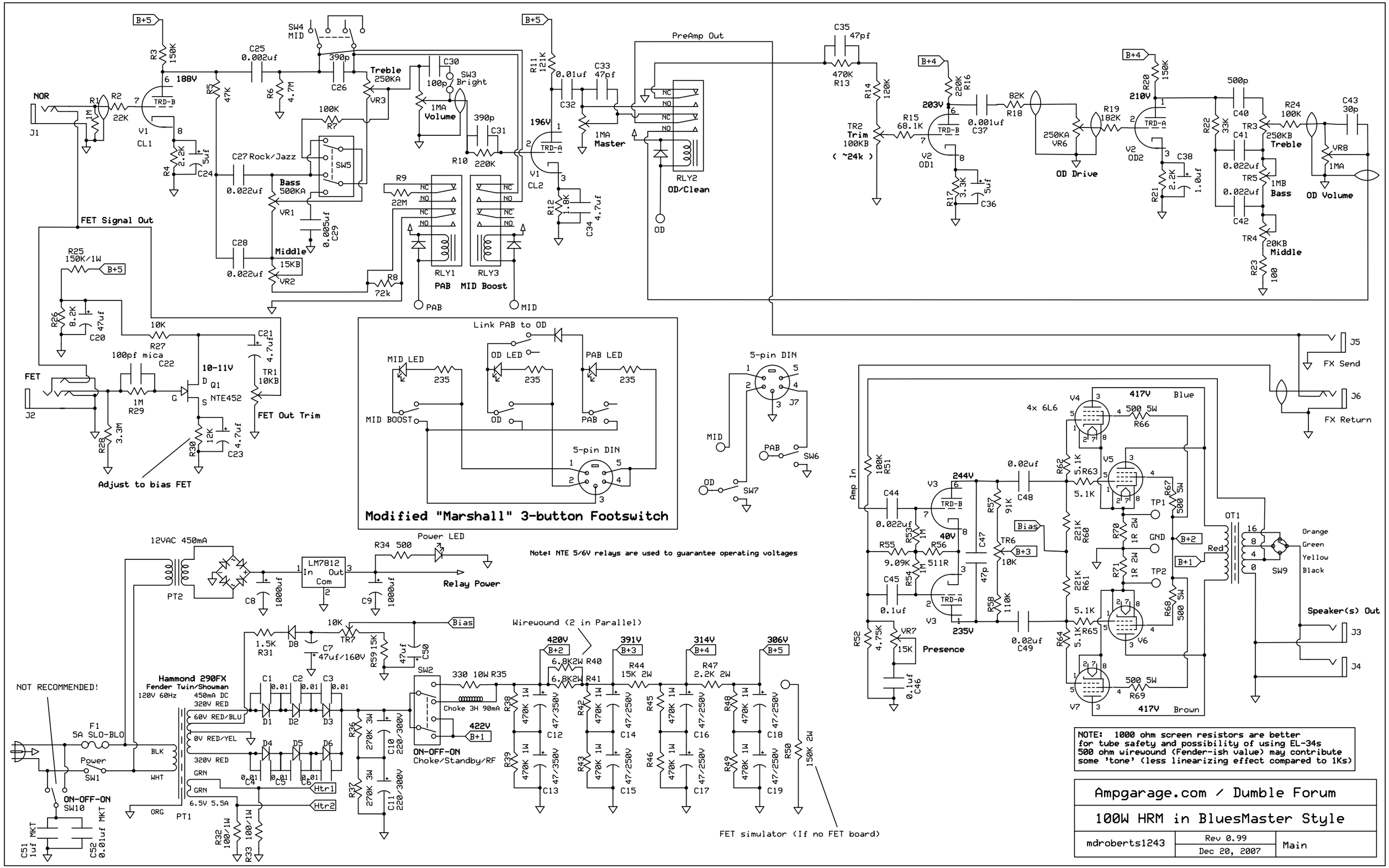
B+5
SW4 MID
R3 150K
C25 0.002uf
390p
C26
Treble 250KA
VR3
C30 100p
SW3 Bright
1MA Volume
R5 47K
R6 4.7M
188V
NOR
J1
R1 1M
R2 22K
V1 CL1
R4 2.2K
C24 5uf
C27 Rock/Jazz
0.022uf
Bass 500KA
VR1
SW5
100K R7
C29 0.005uf
C28 0.022uf
Middle 15KB
VR2
R9 22M
R8 72k
RLY1 PAB
RLY3 MID Boost
PAB
MID
R11 121K
0.01uf C32
C33 47pf
1MA Master
390p C31
R10 220K
196V
V1 CL2
R12 1.8K
C34 4.7uf
PreAmp Out
RLY2 OD/Clean
OD
C35 47pf
470K R13
R14 120K
TR2 Trim 100KB
(~24k)
R15 68.1K
B+4
220K R16
203V
V2 OD1
0.001uf C37
82K R18
R17 3.3K
C36
250KA VR6
OD Drive
R19 182K
R20 150K
210V
V2 OD2
C38 1.0uf
R21 2.2K
500p C40
R22 33K
C41 0.022uf
TR3 250KB Treble
R24 100K
C43 30p
VR8 1MA
OD Volume
TR5 1MB Bass
C42 0.022uf
TR4 20KB Middle
R23 100
FET Signal Out
R25 150K/1W
R26 8.2K
C20 47uf
10K R27
C21 4.7uf
100pf mica C22
10-11V
Q1 NTE452
TR1 10KB
FET Out Trim
FET
J2
1M R29
R28 3.3M
R30 12K
C23 4.7uf
Adjust to bias FET
Link PAB to OD
MID LED
OD LED
PAB LED
235
MID BOOST
OD
PAB
5-pin DIN
Modified "Marshall" 3-button Footswitch
5-pin DIN
J7
MID
PAB
SW6
OD
SW7
J5
FX Send
J6
FX Return
Amp In
100K R51
C44 0.022uf
R53 1M
R55 9.09K
R56 511R
R54 1M
C45 0.1uf
R52 4.75K
VR7 15K
Presence
C46 0.1uf
V3
244V
40V
235V
TRD-B
TRD-A
R57 91K
C48 0.02uf
C47 47p
TR6 10K
Bias
B+3
R58 110K
0.02uf C49
4x 6L6
V4
417V Blue
500 5W R66
V5
R62 5.1K
R63 5.1K
R67 500 5W
TP1
R70 1R 2W
GND
B+2
R71 1R 2W
TP2
B+1
R60 221K
R61 221K
R68 500 5W
R64 5.1K
R65 5.1K
V6
V7
R69 500 5W
417V Brown
OT1
Red
Orange
Green
Yellow
Black
SW9
Speaker(s) Out
J3
J4
12VAC 450mA
PT2
C8 1000uf
LM7812
In Out
Com
C9 1000uf
R34 500
Power LED
Relay Power
Note: NTE 5/6V relays are used to guarantee operating voltages
10K TR7
Bias
1.5K R31
D8
C7 47uf/160V
R59 15K
47uf C50
Wirewound (2 in Parallel)
420V B+2
391V B+3
314V B+4
306V B+5
6.8K2W R40
6.8K2W R41
R44 15K 2W
R47 2.2K 2W
330 10W R35
Choke 3H 90mA
422V B+1
SW2
ON-OFF-ON Choke/Standby/RF
NOT RECOMMENDED!
Hammond 290FX
Fender Twin/Showman
120V 60Hz
450mA DC
320V RED
60V RED/BLU
0V RED/YEL
320V RED
GRN
GRN
6.5V 5.5A
ORG
BLK
WHT
PT1
F1 5A SLO-BLO
Power SW1
ON-OFF-ON SW10
C1 0.01
C2 0.01
C3 0.01
D1
D2
D3
D4
D5
D6
C4 0.01
C5 0.01
C6 0.01
Htr1
Htr2
R36 270K 3W
R37 270K 3W
C10 220/300V
C11 220/300V
R38 470K 1W
R39 470K 1W
C12 47/350V
C13 47/350V
R42 470K 1W
R43 470K 1W
C14 47/250V
C15 47/250V
R45 470K 1W
R46 470K 1W
C16 47/250V
C17 47/250V
R48 470K 1W
R49 470K 1W
C18 47/250V
C19 47/250V
R50 150K 2W
FET simulator (If no FET board)
C51 1uf MKT
C52 0.01uf MKT
R32 100/1W
R33 100/1W
NOTE: 1000 ohm screen resistors are better
for tube safety and possibility of using EL-34s
500 ohm wirewound (Fender-ish value) may contribute
some 'tone' (less linearizing effect compared to 1Ks)
Ampgarage.com / Dumble Forum
100W HRM in BluesMaster Style
mdroberts1243
Rev 0.99
Dec 20, 2007
Main